BSLBATT®
Best Solution Lithium Battery

Floor Cleaning Machine LiFePO4Battery

B-LFP24-72FM



MODEL B-LFP24-72FM
NOMINAL VOLTAGE 25.6V
NOMINAL CAPACITY 72Ah
CELL CHEMISTRY Lithium Iron Phosphate (LiFePO4)
CYCLE LIFE ≥4000 cycles at 25℃, 0.5C rate, 80% DOD to 80% of initial capacity

SAFETY & INTELLIGENCE

- Continuous voltage, current, and temperature monitoring
- Six redundant safety protections using Level 4 fuses.
- Multiple battery isconnects and Microprocessors
- CAN-Bus Communication
- SOC can check the power at any time
- Bluetooth@ (MOS solution)

PHYSICAL SPECIFICATIONS

Dimensions L*W*H Inches (MM)	17.32*9.21*9.65(440*234*245)
Weight (KG)	25
Terminal Type	M8
Protection Level	IP65
Shell Material	iron
Handle Material	Metal
Calendar Life	12years 25℃，SOC 100% ,EOL 80%
Battery pack factory SOC	50%
Battery SOC operating range	0-100%

ELECTRICAL SPECIFICATIONS

Nominal Voltage (V)	25.6
Operating Voltage	20V to 29.2V Battery Cell:2.5 ~3.65
Capacity AMP Hours (AH)	72Ah
Energy (WH)	1,843 Wh
Self-Discharge	1-3% per month
Battery Group Solution	8S1P A boxful

TEMPERATURE SPECIFICATIONS

Discharge Temperature Range	-4°F to 140°F (-20℃ to 60℃)
Charge Temperature Range	32°F to 131°F (0℃ to 55℃)
Storage Temperature Range	-4°F to 140°F (-20℃ to 60℃)

PHYSICAL PRECISION

Insulation requirements	≥20MΩ/1000VDC 25℃±5℃ RH50%
Unit voltage acquisition accuracy	±5mV Capture every single monomer
Balanced current	30mA ±10 passive balance
BMS power consumption	≤3W
Temperature acquisition accuracy	±2℃
SOC theoretical estimation accuracy	±5%
Current acquisition accuracy	≤ ± 0.5% FSR

SAFETY AND FEATURES

Protection function	Short Cicuit Potection Overheat Protection Overcharge Protection	Over-discharge Protection Overcurrent Protection Real-time Temperature Monitoring
Battery Insurance	PICC	
Battery case function	Switch sleep button Pressure relief valve	
Battery certification	UL/CE/IEC/UN38.3	

DISCHARGE SPECIFICATIONS Perormance and System @77°F (25℃)

Maximum Continuous Discharge Current	36A
Maximum Pulse Discharge Current (10 sec)	144A

CHARGING SPECIFICATIONS

Recommended Standard Charger Current	≤20A	
Maximum Continuous Charging Current	36A	50°F~113°F(10℃~45℃),5% < SOC < 80%
Maximum instantaneous charging current (1S)	54A	50°F~113°F(10℃~45℃),5% < SOC < 80%

www.lithium-battery factto .com / www.bslbatt.com

Designed and finally processed by China
BSLBATT Battery Company, the batteries are manufactured in China.

All data based on the BSLBATT standard test procedure on a flat road

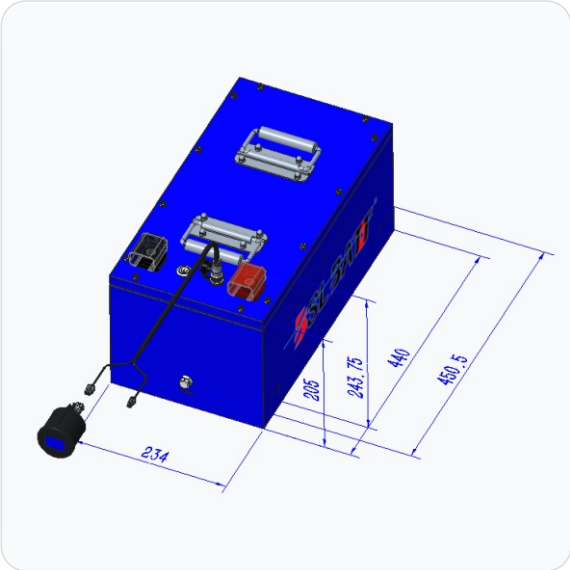



Charging transfer charger

Meter





Display extended wire

Charger accessories



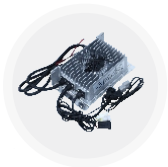

Recharger

USB to CAN (Optional)



FIVE YEAR COST COMPARISON BETWEEN BSLBATT & LEAD ACID BATTERIES





	YEAR 1	YEAR 2	YEAR 3	YEAR 4	YEAR 5
	$ Cost Of Battery	Installation	Maintenance	Maintenance	Maintenance	Battery Change
	$$$$				
				Total	$$$$
	$$	$	$	$	$	$$
					Total	$$$$$$$$

STRUCTURAL DIFFERENCES IN THE BSLBATT FLOOR CLEANING MACHINE SERIES

Each Cell Is Encased In Aluminum
☑ Provides dimensional stability

Steel Battery Bracket
☑ Provides vibration and shock resistance

External Heat Sink Keeps
☑ BMS cool by providing heat dissipation to outside

Bolted Connections To BMS
☑ Provides stable mechanical and electrical connections

Positive And Negative BusBar
☑ Creates an exceptional current collector

IP65 Rated Casing
☑ Ensures water, dust and splash-resistance

BMS Bolted To Heat Sink
☑ Reduces vibration and prevents accidental faults due to vibration and it extends battery life

TECHNICAL BSLBATT LITHIUM CURVE

ENVIRONMENT TEMPERATURE:25℃

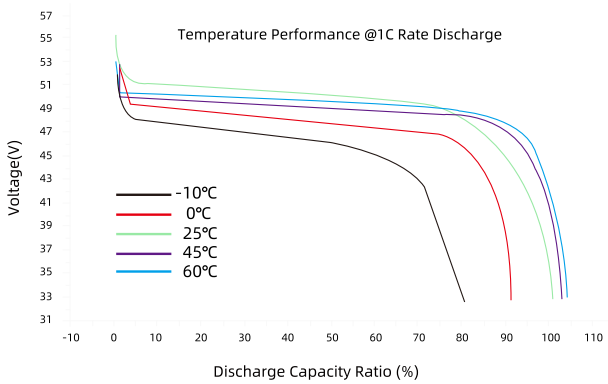

CHARGING CONDITION: 1C CC-CV to 3.65V, cutoff 0.05C @25℃;

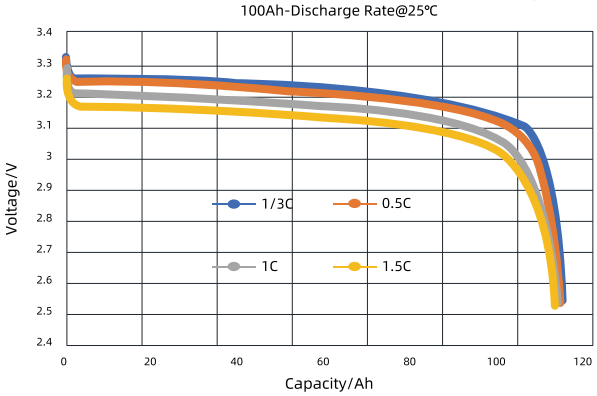

©2025 BSLBATT New Energy Technology Co., Ltd. All rights reserved. In no event shall BSLBATT Battery Company be liable for damages resulting from any information provided or omitted from this publication.

BSLBATT Battery Company reserves the right to make adjustments to this publication at any time without prior notice or obligation.

inquiry@bsl-battery.com